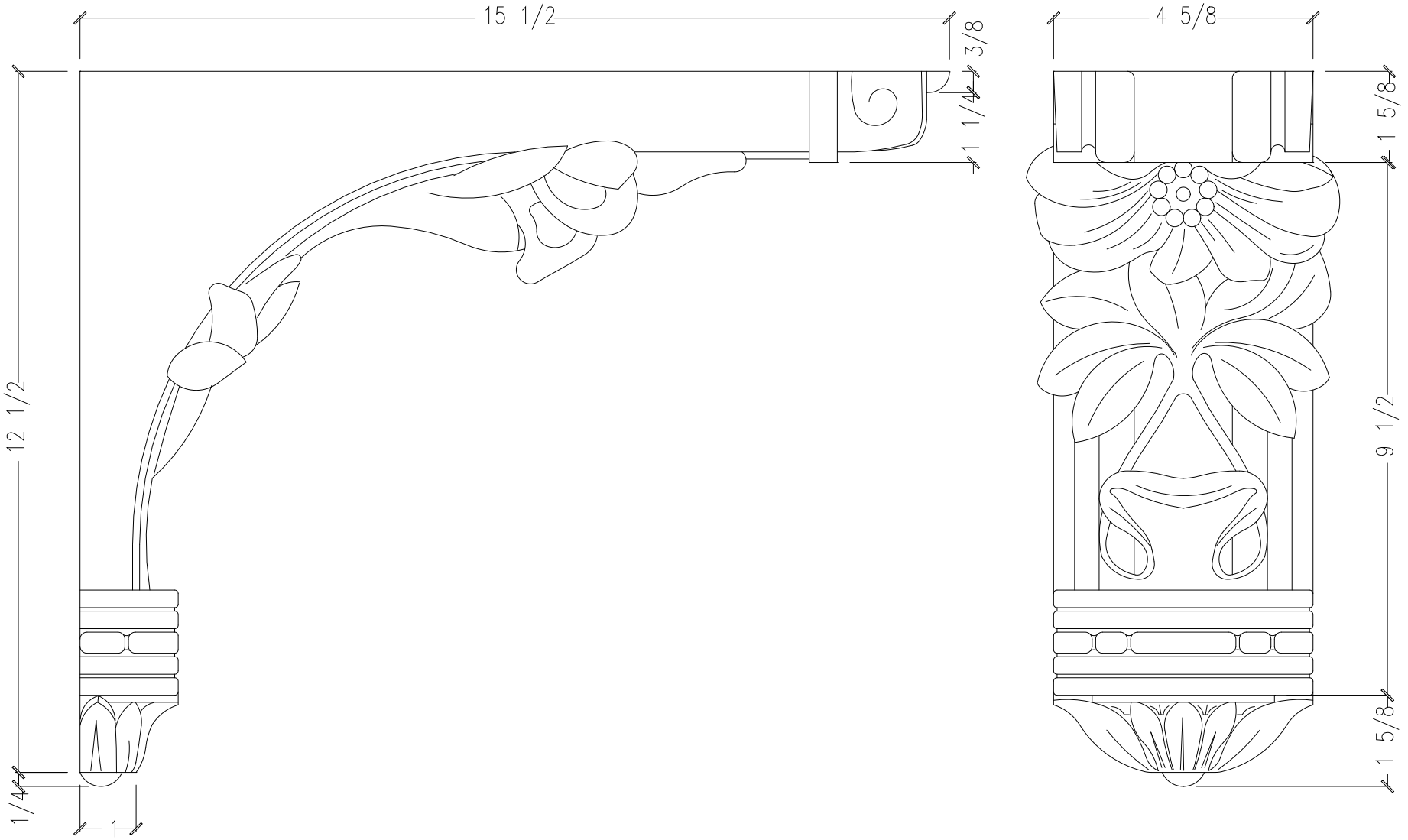

Chemcrest Architectural Products

Date	Revised	Length	Width	Height	Projection	Repeat	Texture	Plot scale	PART: BRACKET-WALL
APR/12/06	-----	0"	4-5/8"	12-1/2"	15-1/2"	-----	SMOOTH	3/8 = 1"	PART NO.: WB514 note: product may vary (+/-) 1/8"