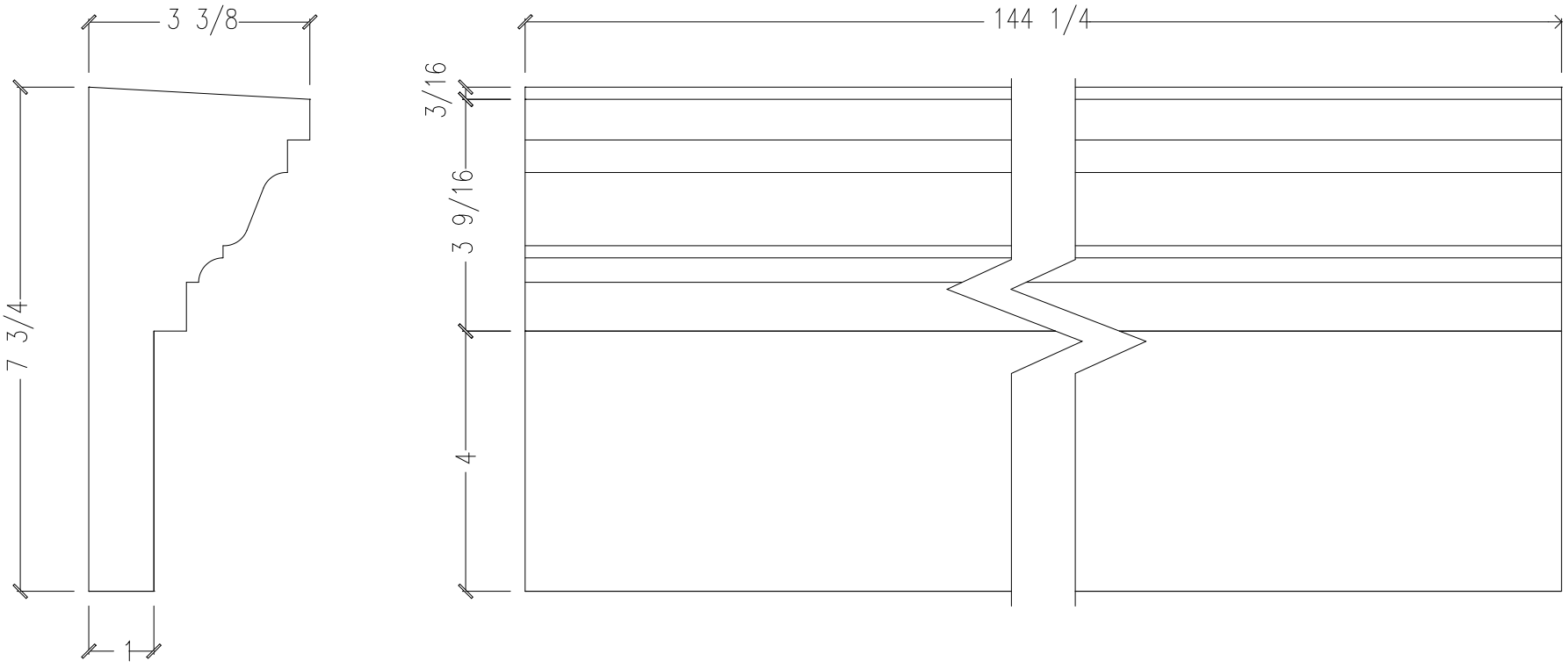

Chemcrest Architectural Products

Revised	Date	Texture	Length	Height	Projection	Repeat	Plot scale	PART: MOULDING
-----	APR/07/06	SMOOTH	144-1/4"	7-3/4"	3-3/8"	-----	3/8=1"	PART NO.: M8907 note: product may vary (+/-) 1/8"