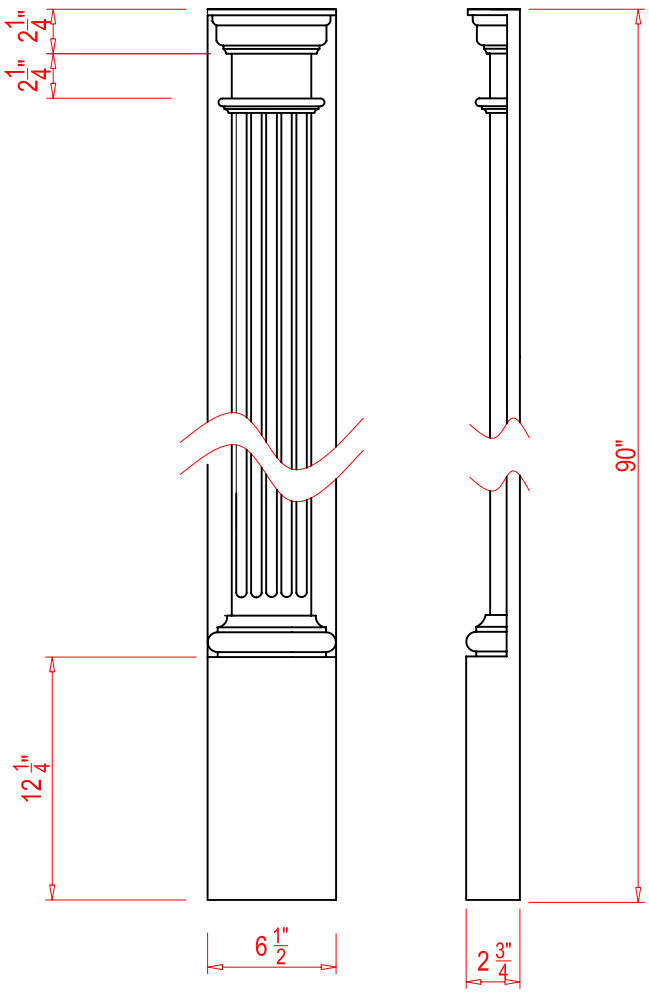

PROPERTY OF
CHEMCREST INC.
55 Bradwick Drive,
Concord, Ontario
L4K 1K5
www.chemcrest.com
orders@chemcrest.com
Phone: 1-800-665-6653
Fax: 1-888-715-1813
Design Copyright © Chemcrest Inc. 2011 All rights reserved

Date: July 30,2003

Revised Date: August 02,2011

Drawn By: JR

NON VISUAL AND BACKSIDE AREAS OF PRODUCT MAY BE SUBJECT TO MODIFICATION BY CHEMCREST INC.

CUSTOMER APPROVAL

CUSTOM MADE PARTS
ONCE A DRAWING IS SIGNED OFF AND PRODUCT IS MADE CUSTOMER CAN NOT RETURN PRODUCT TO CHEMCREST INC.

Part #: **E680**
(Quote part number when re-ordering)

Part: **Pilaster (w/BackBoard)**

Dimensions: Width: 6 1/2" Height: 90" Projection: 2 3/4"

Tolerance: +/- 1/4"

Scale: Not to scale

Material: Polyurethane

Texture: Smooth