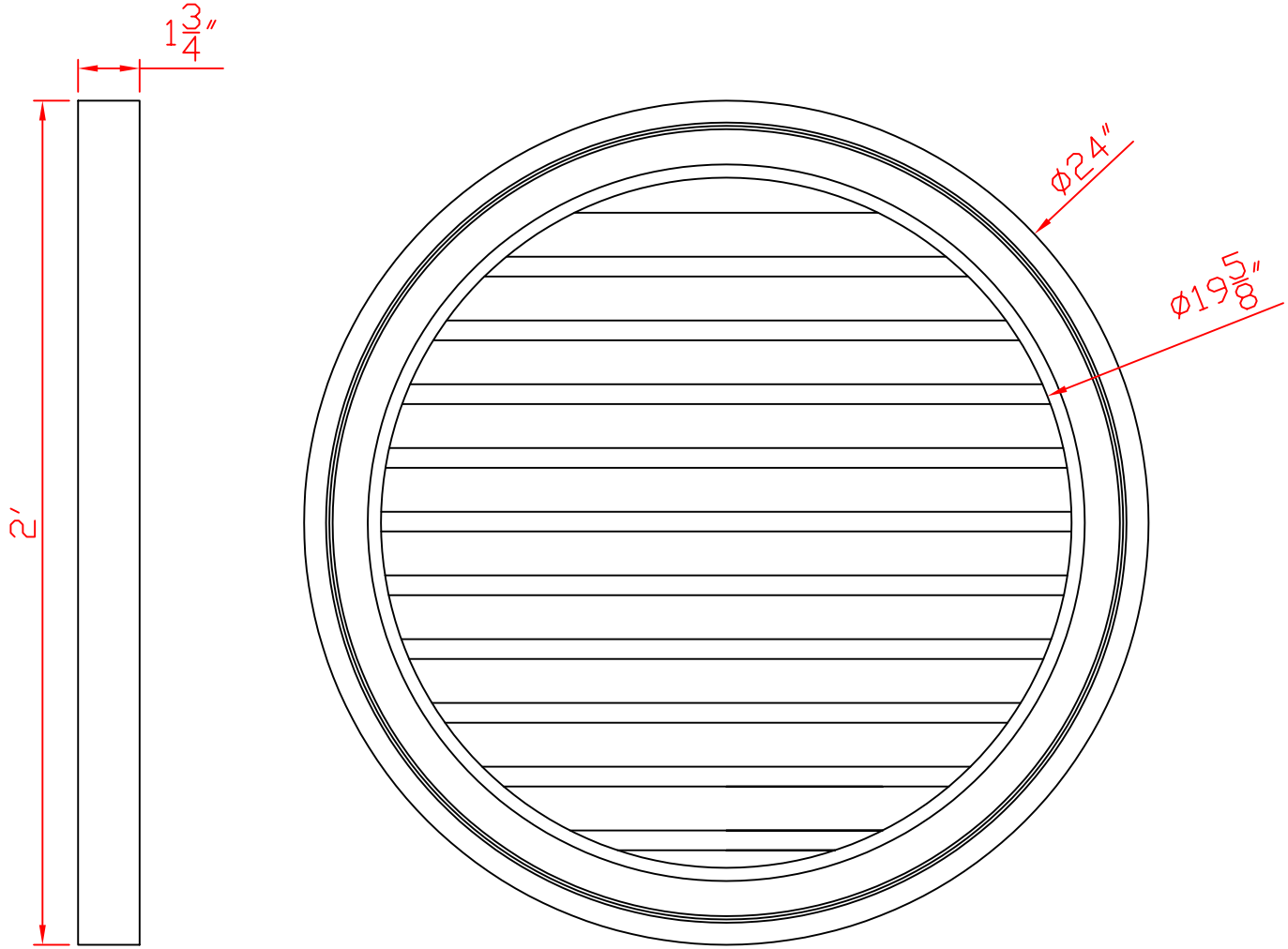

PROPERTY OF
CHEMCREST INC.
55 Bradwick Drive,
Concord, Ontario
L4K 1K5
Phone: 1-800-665-6653
Fax: 1-888-715-1813
www.chemcrest.com
orders@chemcrest.com
Design Copyright © Chemcrest Inc. 2011 All rights reserved

Date: May 28,2004

Revised Date: August 29,2011

Drawn By: MS

NON VISUAL AND BACKSIDE AREAS OF PRODUCT MAY BE SUBJECT TO MODIFICATION BY CHEMCREST INC.

CUSTOMER APPROVAL

CUSTOM MADE PARTS
ONCE A DRAWING IS SIGNED OFF AND PRODUCT IS MADE CUSTOMER CAN NOT RETURN PRODUCT TO CHEMCREST INC.

Part #: **G1024**
(Quote part number when re-ordering)

Part: **Round Louver (Decorative)**

Dimensions: Diameter: 24" Projection: 1 3/4"

Tolerance: +/- 1/4"

Scale: Not to scale

Material: Polyurethane

Texture: Smooth