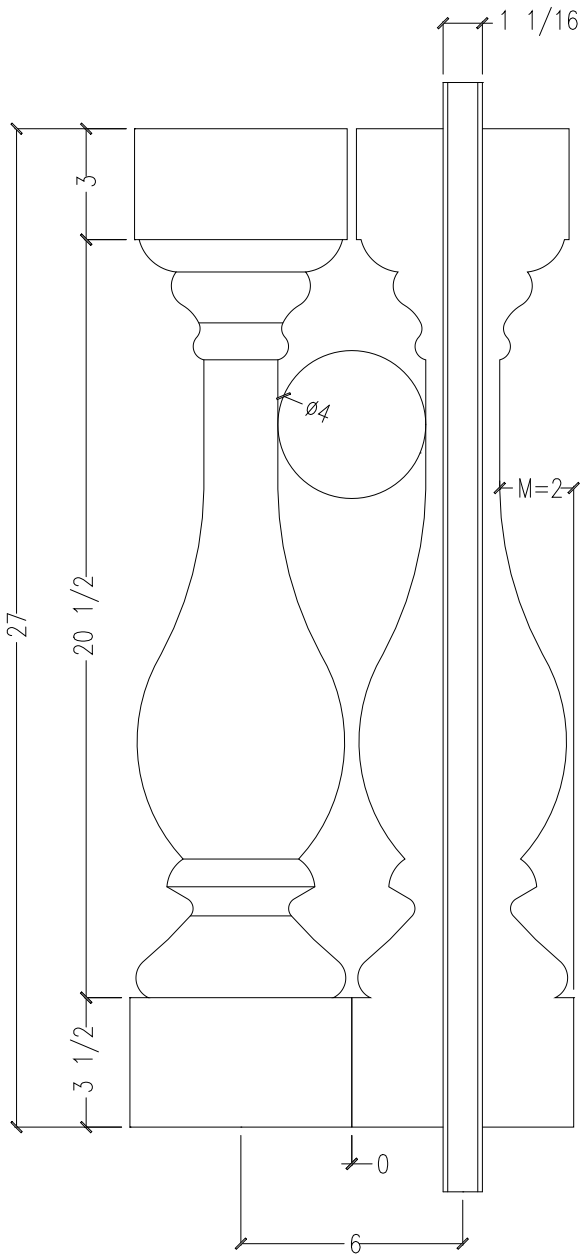

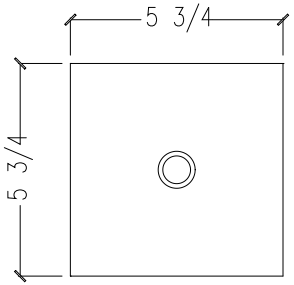

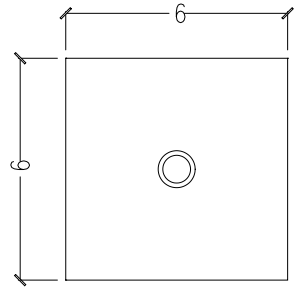

Chemcrest Architectural Products

Revised	Date	Width	Height	Hole Size
-----	APR/10/06	6"	27"	1-1/16"
Repeat	Texture	Plot scale	PART:	BALUSTER
-----	SMOOTH	1/4"=1"	PART NO.:	B7027

note: product may vary +/- 1/8"